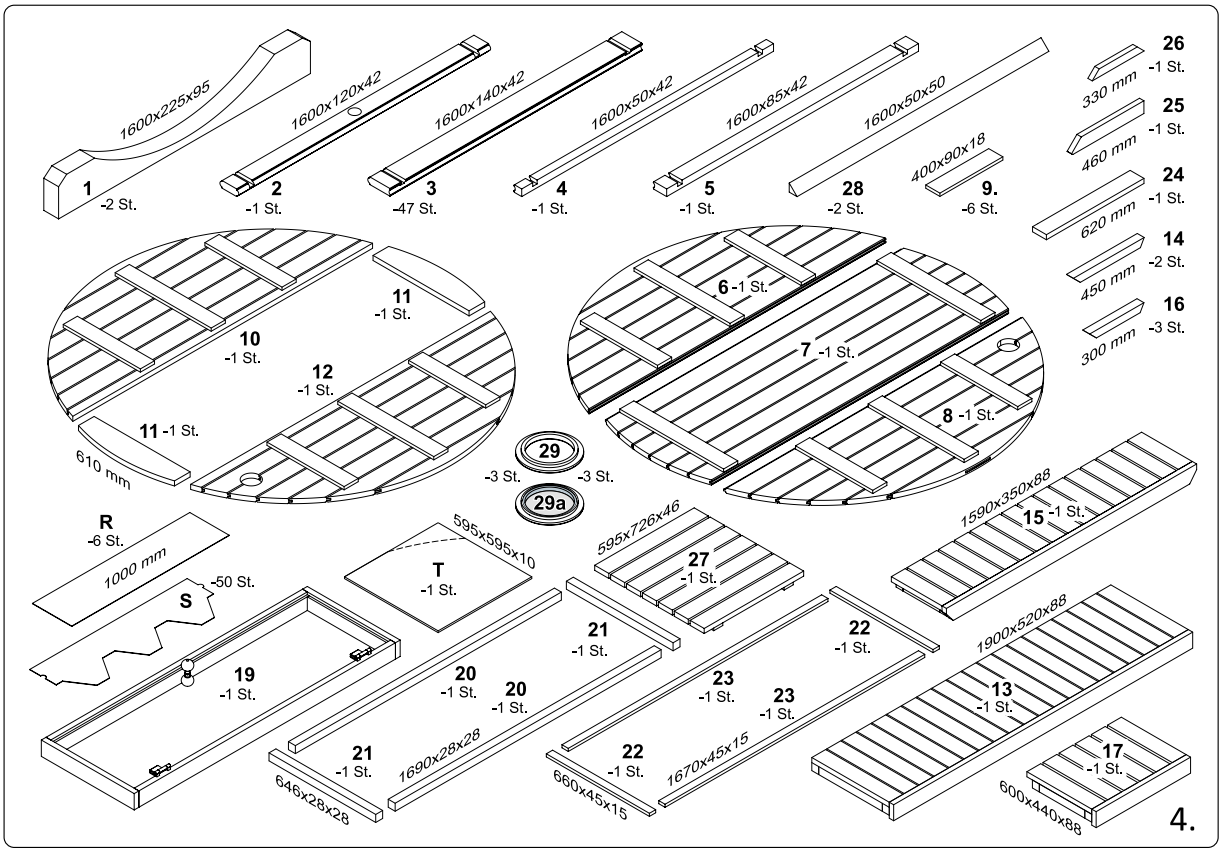
1600x225x95
1 -2 St.
1600x120x42
2 -1 St.
1600x140x42
3 -47 St.
1600x50x42
4 -1 St.
1600x85x42
5 -1 St.
1600x50x50
28 -2 St.
400x90x18
9. -6 St.
330 mm
26 -1 St.
460 mm
25 -1 St.
620 mm
24 -1 St.
450 mm
14 -2 St.
300 mm
16 -3 St.
11 -1 St.
10 -1 St.
12 -1 St.
11 -1 St.
610 mm
6 -1 St.
7 -1 St.
8 -1 St.
29
-3 St.
-3 St.
29a
R -6 St.
1000 mm
-50 St.
S
595x595x10
T -1 St.
595x726x46
27 -1 St.
1590x350x88
15 -1 St.
19 -1 St.
20 -1 St.
20 -1 St.
21 -1 St.
23 -1 St.
23 -1 St.
22 -1 St.
1900x520x88
13 -1 St.
21 -1 St.
646x28x28
1690x28x28
22 -1 St.
660x45x15
1670x45x15
17 -1 St.
600x440x88
4.

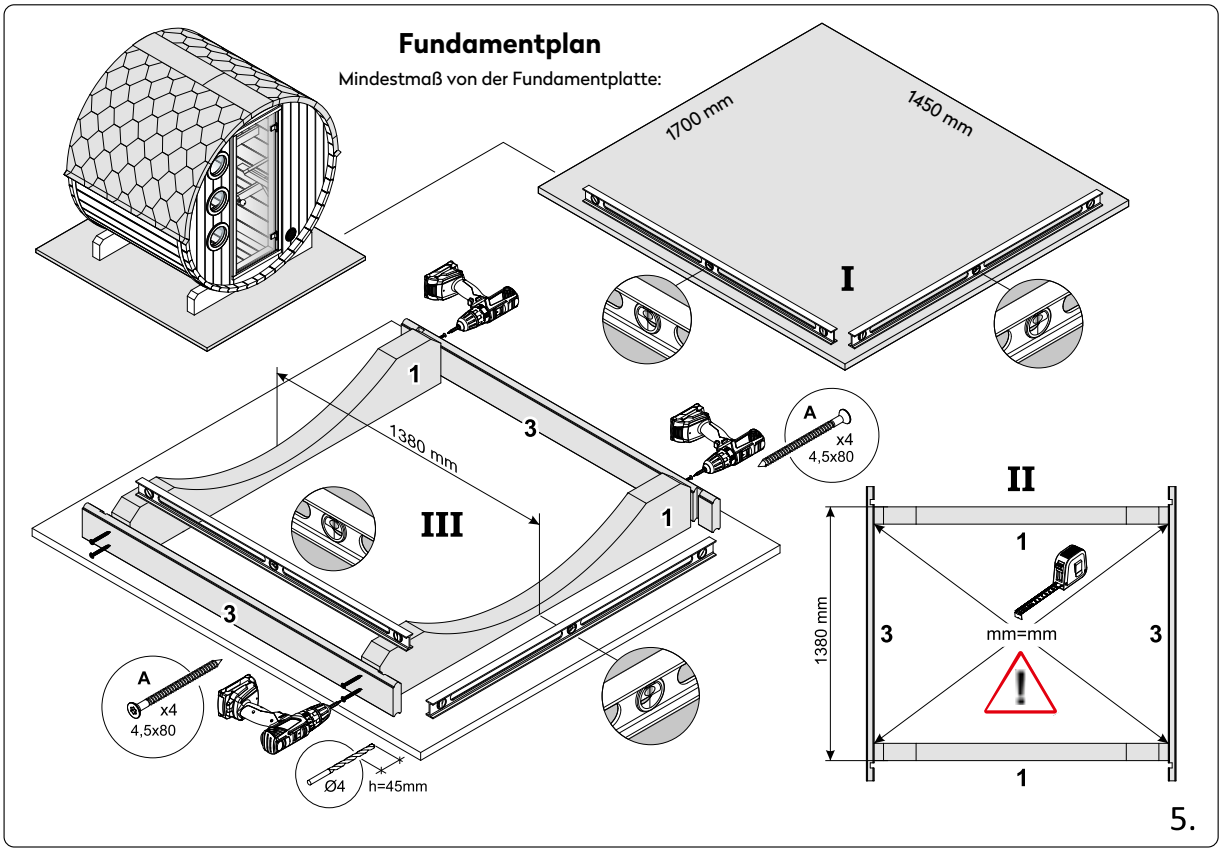
Fundamentplan
Mindestmaß von der Fundamentplatte:
1700 mm
1450 mm
I
1
3
1380 mm
III
1
3
A
x4
4,5x80
A
x4
4,5x80
Ø4
h=45mm
II
1
3
3
1380 mm
mm=mm
1
5.